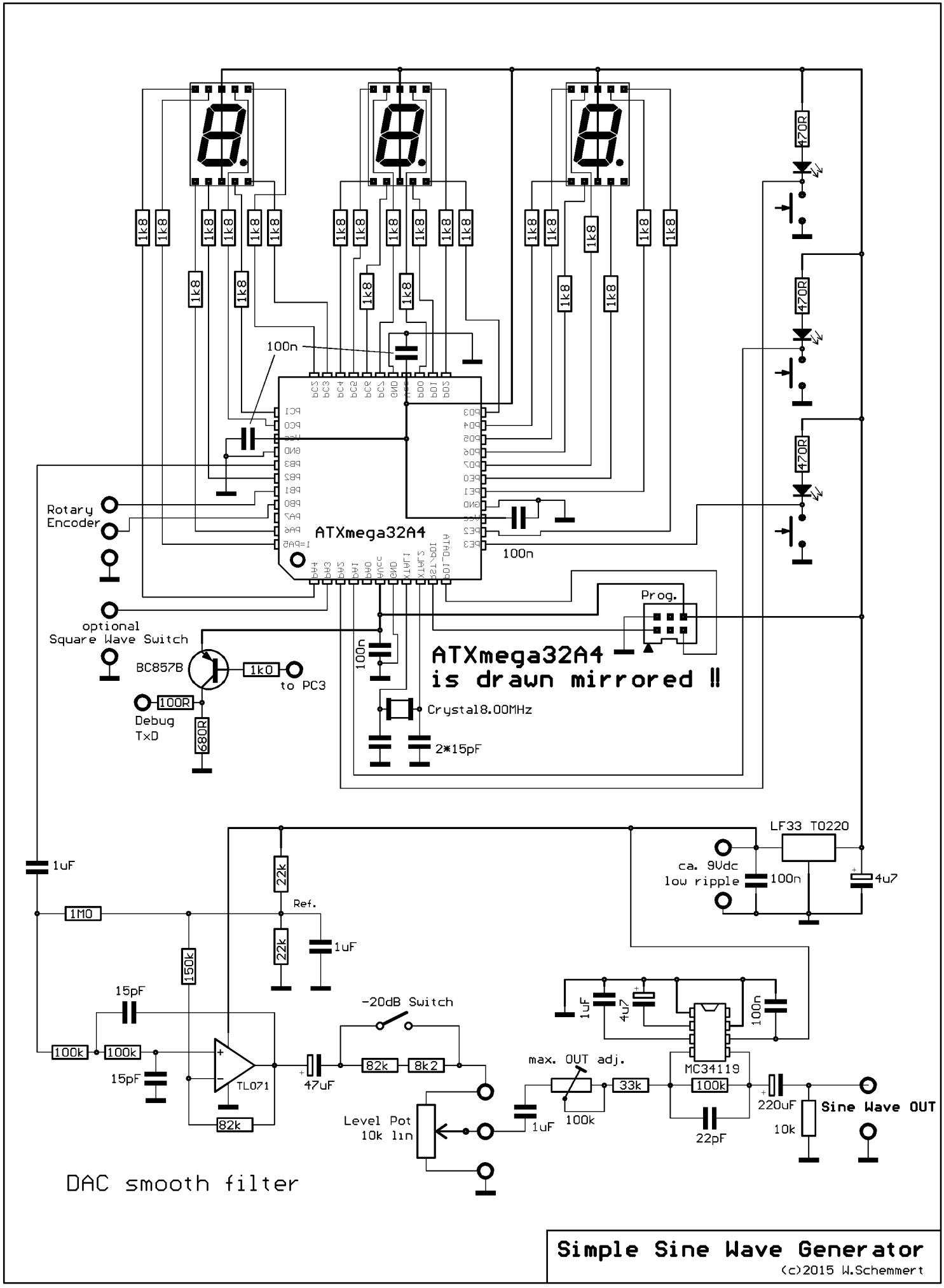
1k8
470R
100n
ATXmega32A4
Rotary Encoder
optional Square Wave Switch
BC857B
1k0
to PC3
100R
Debug TxD
680R
Prog.
ATXmega32A4 is drawn mirrored !!
Crystal8.00MHz
2*15pF
LF33 TO220
ca. 9Vdc low ripple
4u7
1uF
1M0
22k
Ref.
150k
15pF
100k
TL071
82k
47uF
-20dB Switch
8k2
Level Pot 10k lin
max. OUT adj.
33k
MC34119
220uF
10k
22pF
Sine Wave OUT
DAC smooth filter
Simple Sine Wave Generator
(c)2015 W.Schemmert